Product Dimensions

Knurled Shaft

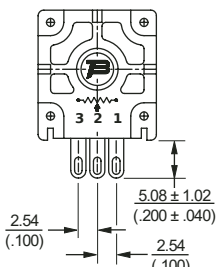

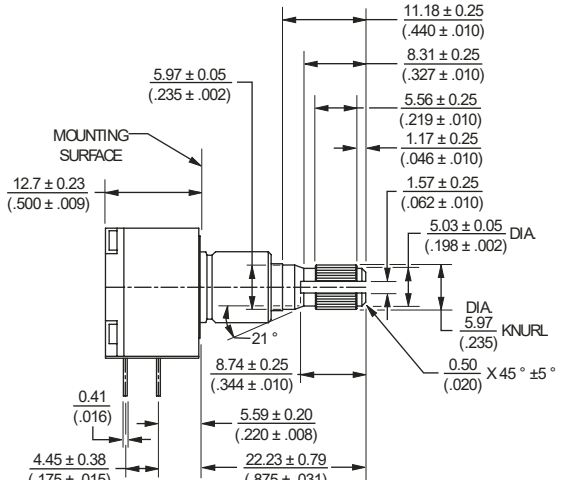
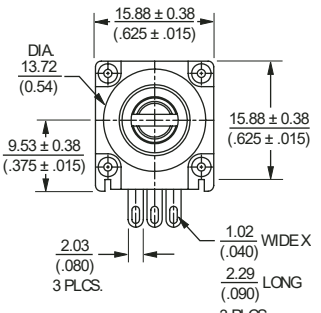
DIMENSIONS ARE: MM (INCHES)