ISS.	AMEND	DATE
1	REDRAWN	11/01/91
2	REDRAWN	15/06/92
3	PC-C KINK ADD	17/11/92
4	TOL ADDED	03/12/92
5	* KINK LEG NOTE	23/03/93
6	PCA/S REDRAWN	13/04/95
7	NOTE AMENDED	08/01/96
8	SEE MOD 0214	09/08/96
9	SEE MOD 0221	14/03/97
10	WASHER MATL	26/06/01
11	CORRECTED	23/04/02
12	RoHS+SCHEMATIC	04/11/09

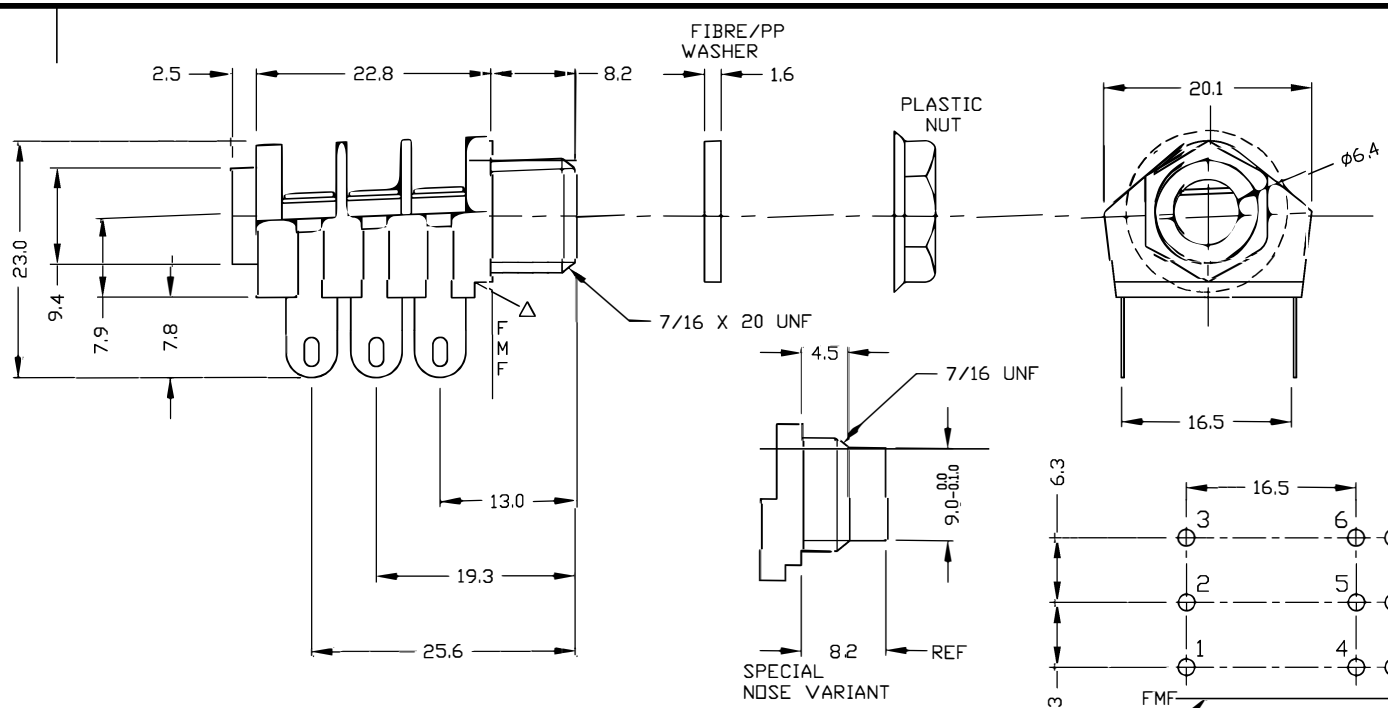

SCHEMATIC

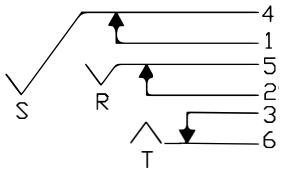

SWITCH CONTACTS OPEN WHEN PLUG IS INSERTED, CLOSE WHEN PLUG IS WITHDRAWN.

△THIS RECESS IS TO FACILITATE MOUNTING IN FLOWSOLDER JIGS

NOTE.
S2T. JACKS HAVE ALL CONTACTS PLATED WITH A LOW LOSS FINISH

PC LAYOUT VIEWED FROM COMPONENT SIDE

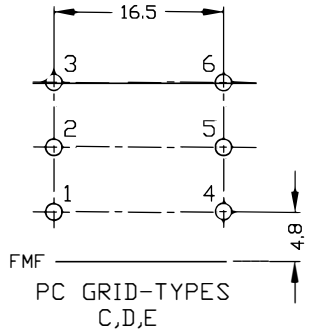

MAX PANEL THICKNESS 4.6mm

*FOR KINKED LEGS USE ø1.5 HOLE ±0.05mm

RoHS COMPLIANT

TOLERANCE

NO DEC. PLACE ±
1 DEC. PLACE ±
2 DEC. PLACE ±
HOLE DIA. ±
ANGLES ±

UNLESS OTHERWISE STATED

WHERE USED F.R.

PCB VARIANTS

BACK OF SOCKET ← → FRONT OF SOCKET

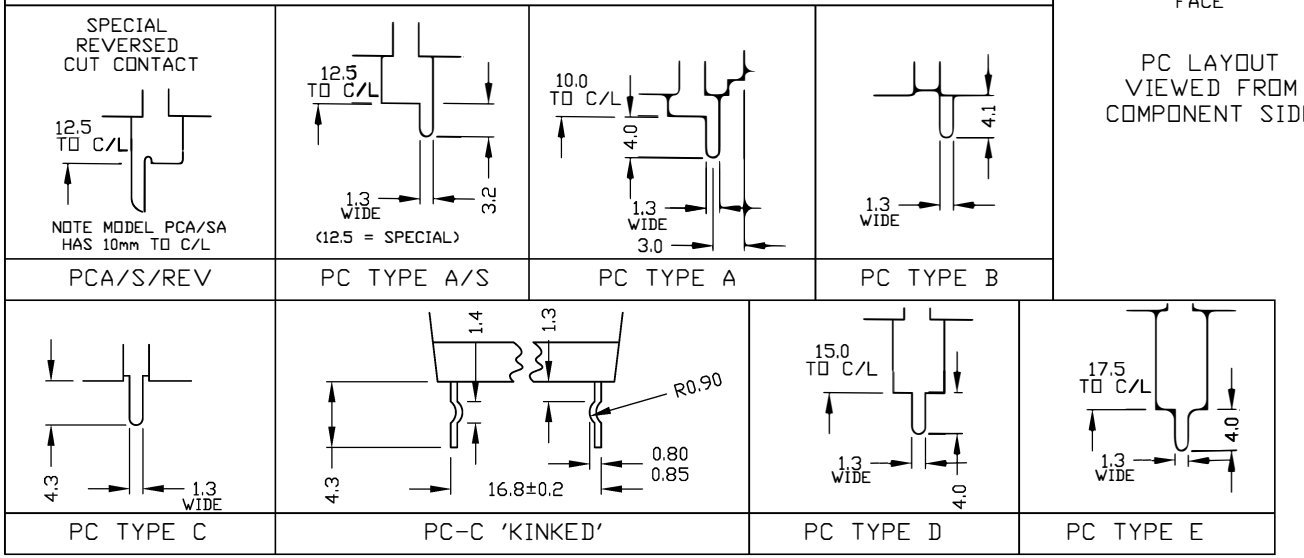

DIMENSIONS IN MILLIMETERS UNLESS OTHER WISE STATED. WORK TO DIMENSIONS. DO NOT SCALE DRAWING. 3rd ANGLE PROJECTION. REMOVE ALL BURRS. IF IN DOUBT ASK.

SCALE N.T.S.

MATERIAL NYLON / NIAG / FIBRE / PP

FINISH AS MOULDED / MICROFINISH

DRAWN MST | APPD. RWT