AE8400,1,5,7,8RKX
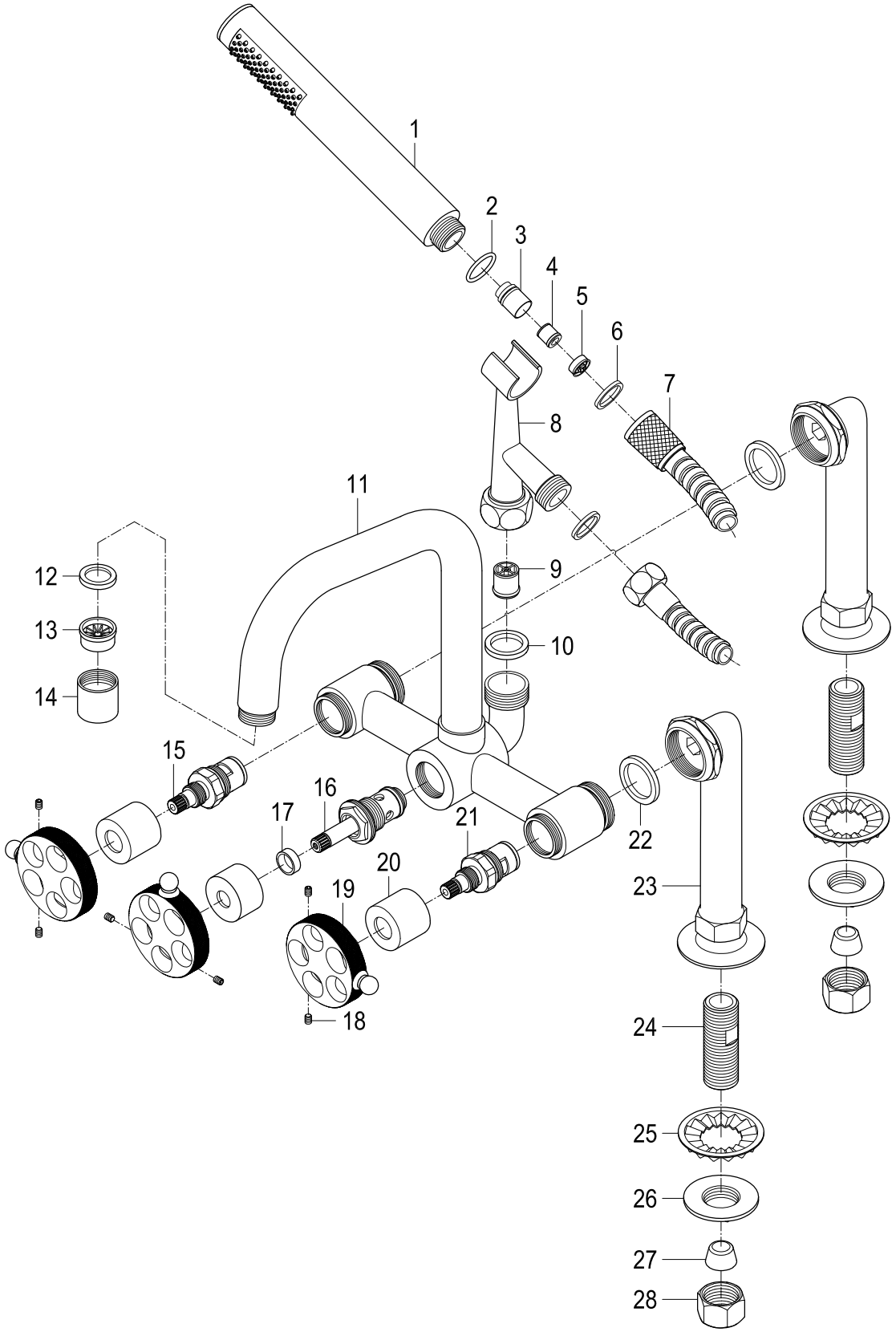
Deck Mount Tub Filler with Head Shower