# KB8911,2,5,8EFL
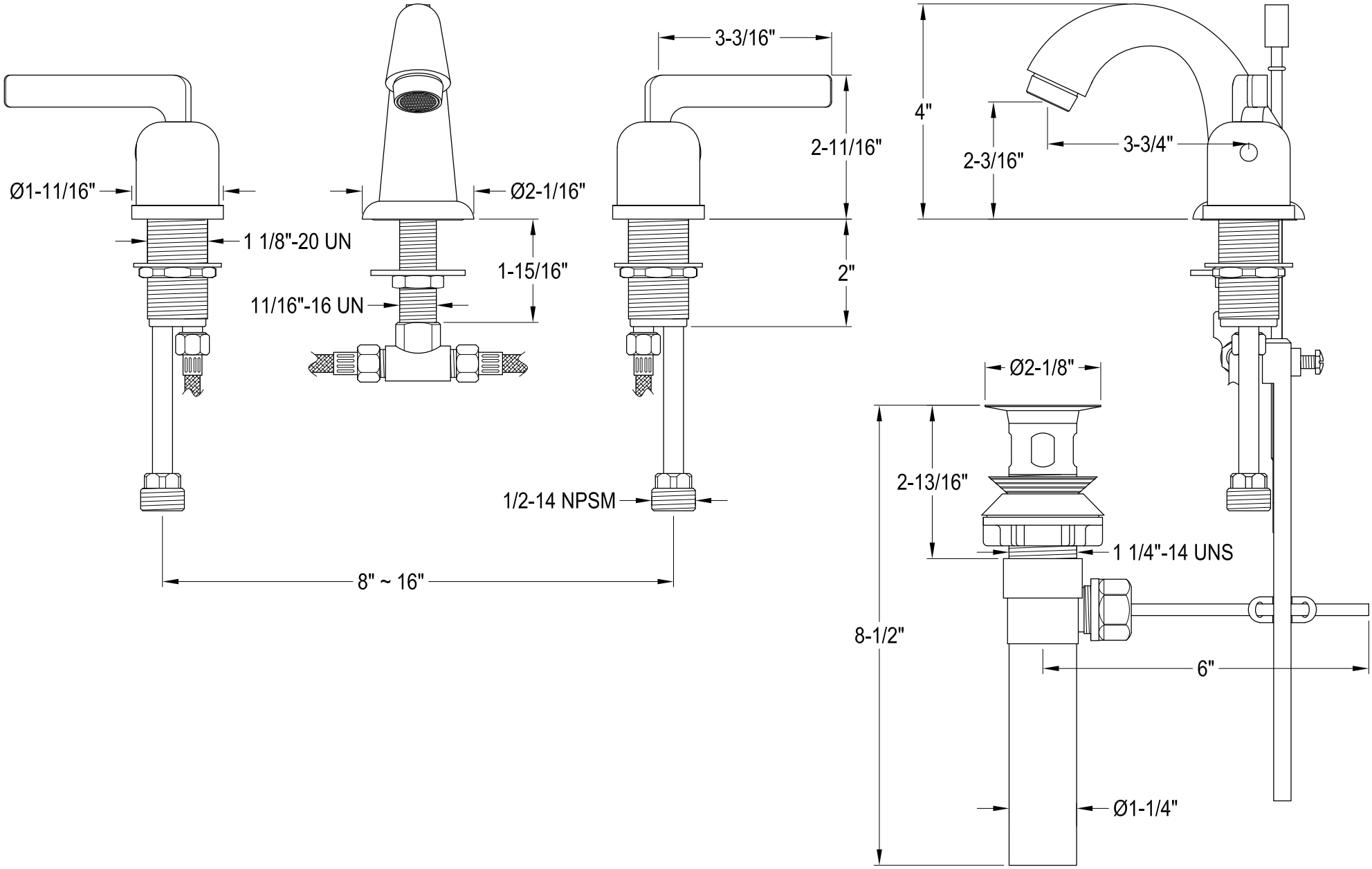
Widespread Lavatory Faucet with Retail Pop-Up