KVPB2018W40,1,6,7

20" Console Sink With Brass Legs

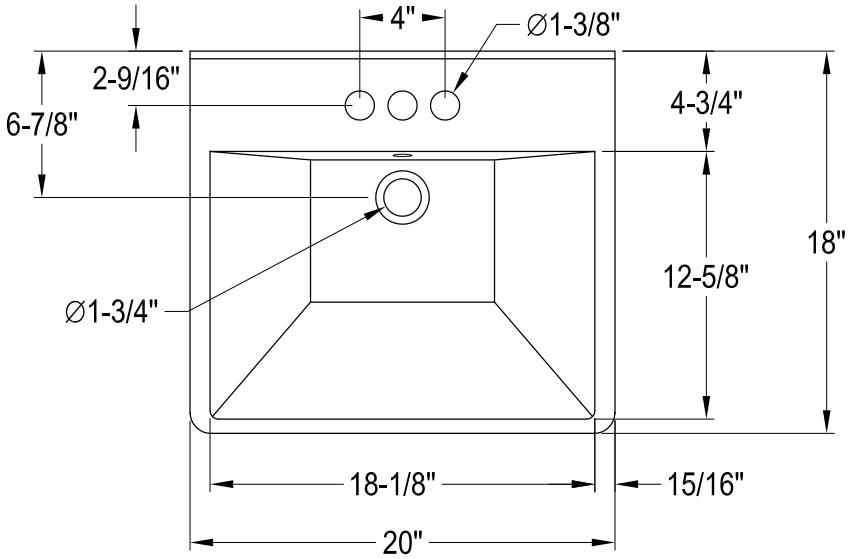

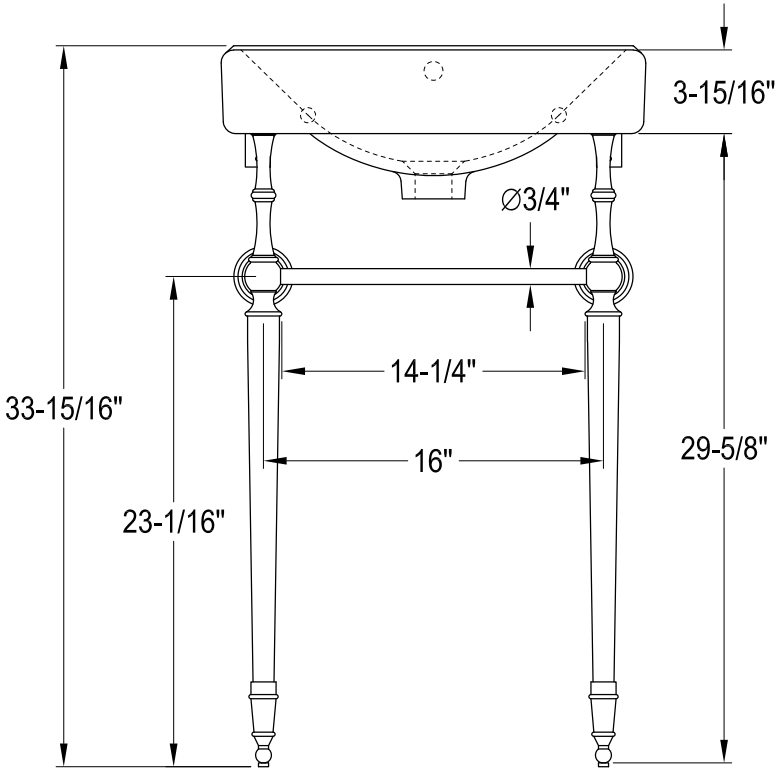

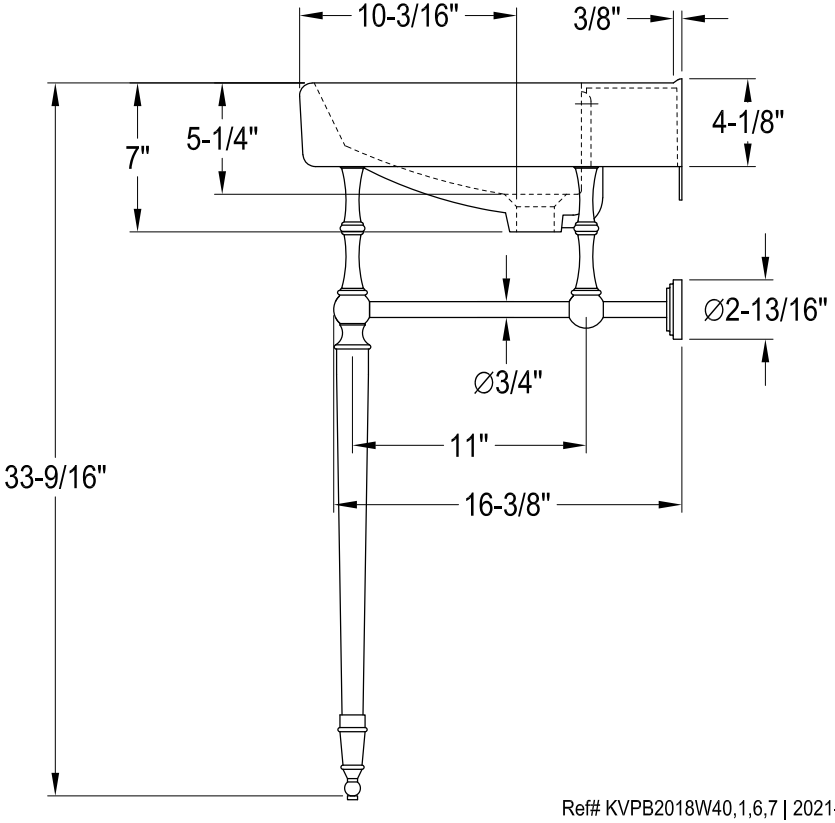

Ref# KVPB2018W40,1,6,7 | 2021-03-B