LSRPL8451CC
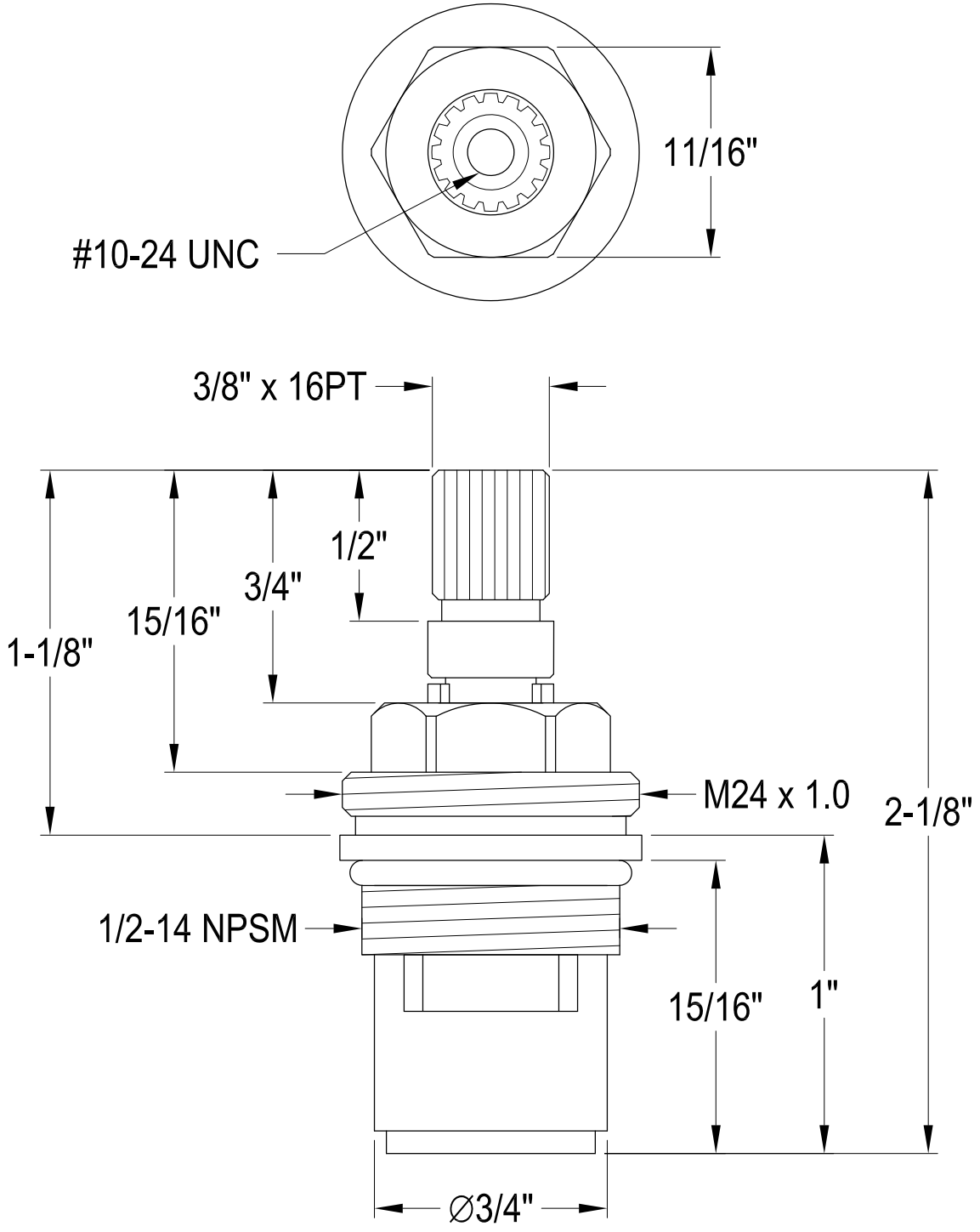
Cartridge,Cold