Opional Accessories

Metal rear attachment set (screw-on)

- 2 rear mount brackets, metal
- 2 sledges, plastic

  ► Non-handed, two-piece design

  ► For up to 50 mm (1 15/16") depth adjustment and ± 1.5 mm (1/16") side adjustment

  ► Additional adjustment via oblong holes

  ► Installation recommended with min. four #6 truss head screws
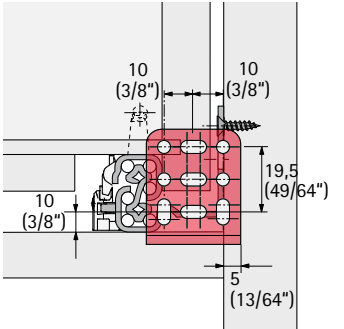
Location of rear bracket (Metal)