INSTRUCTIONS
FOR
CONTINUOUS INJECTION SYSTEM (C.I.S.) BOSCH K-JETRONIC FUEL INJECTION PRESSURE TESTER

- GAGE SHOWS AMERICAN AND METRIC SCALES.
- CLEAR, ILLUSTRATED INSTRUCTIONS PROVIDED.
- EASY TO HOOK-UP AND USE.

CONTENTS OF KIT

PART DESCRIPTION	QUANTITY
A. Pressure Gage with American and Metric Scales	1
B. Pressure Relief Valve	1
C. 25½" Hose with Fittings	1
D. Ball Valve	1
E. 18½" Connecting Hoses with Fittings	2
F. M12-1.5 Male x M8-1.0 Male x 3" with O Ring	1
G. M12-1.5 Male x M8-1.0 Male x 15/16" with O Ring	2
H. M12-1.5 Male x M8-1.0 Female x 15/16"	1
I. M12-1.5 Male x M10-1.0 Female x 1¼"	1
J. M12-1.5 Male x M10-1.0 Male x 1 9/16" with O Ring	1

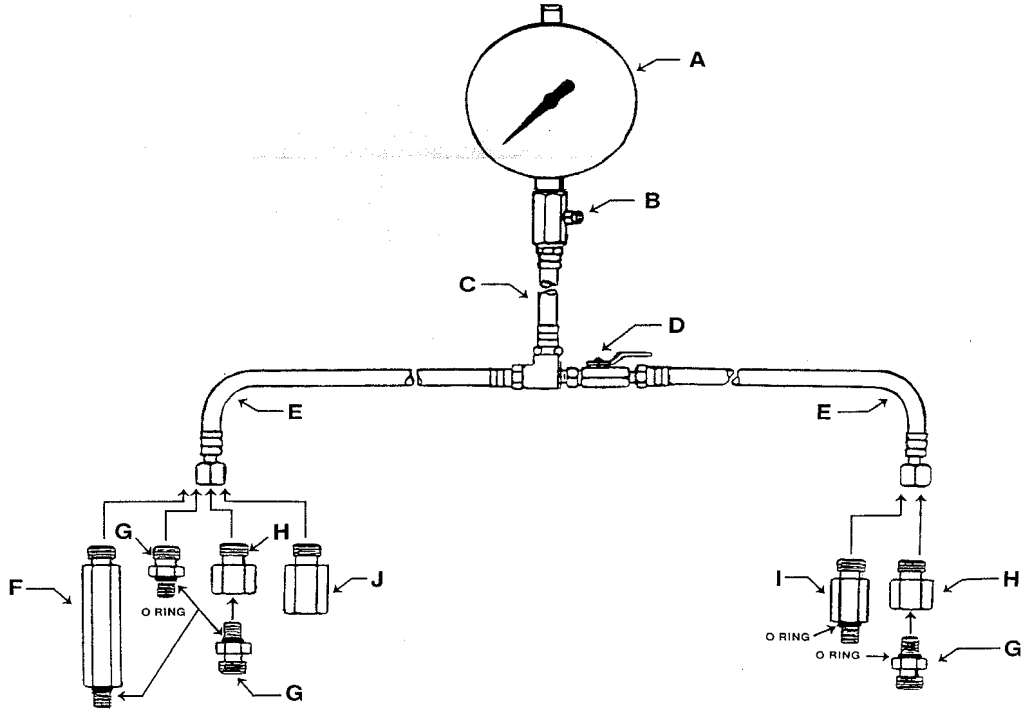

I. IMPORTANT PRE-TEST INFORMATION

1. Always refer to vehicle manufacturer's manual whenever possible for proper fuel pump pressures and maintenance procedures.
2. Do not use this test equipment on diesel fuel systems.
3. Always wear eye protection. Never smoke or work near exposed flames.
4. Have a dry chemical (Class B) fire extinguisher within easy reach.
5. Provide a suitable container to catch released fuel when the system is depressurized.
6. Take extra care to prevent fuel from making contact with hot engine surfaces. It is recommended that tests be made when the engine is cold.
7. If a drop light is used, do not allow fuel to contact the hot surface of the bulb.
8. Never remove any fittings with engine running.
9. Never loosen fittings or attempt to remove hoses of vehicle or test kit before or after test, until you have depressurized the system. This is accomplished by first wrapping a cloth around the pressure relief valve and then depressing the valve button. The cloth wrap will prevent any fuel in the system under pressure from spraying out on the engine or you.
10. Always check all connections in the test circuit for leakage during testing. At any sign of leakage turn off the engine or disable the fuel pump. Depressurize the system following the instructions in paragraph No. 9 above. Clean up any spilled fuel and correct all leaks in system before resuming testing.
11. When testing is completed and all repairs have been made, and pressure has been relieved, remove test gage and adapter(s). Reassemble vehicle's fuel line to original condition. Start engine and check for leaks. If any leaks are noticed, stop engine, relieve fuel pressure and correct the leaks.
12. Use caution at all times. Keep yourself, clothing and test equipment away from all moving or hot engine parts.

II. GENERAL INSTRUCTIONS

1. Clean the top of the fuel distributor to keep dirt from entering the fuel system.
2. After test has been completed remove O ring from test adapter and install a new O ring. O rings can be purchased where tester was purchased.
3. All adapters that thread into either of the swivel hose fittings of the connecting hoses (large M12-1.5 threads) should be tightened snuggly using two 9/16" wrenches. (Do not overtighten.)
4. All adapter fittings with O rings are to be hand tightened only. Never tighten using wrenches.
5. Check completely all components of the vehicle's ignition system. This includes all sparkplugs, sparkplug wires, coil, distributor cap, rotor and pick-up. Check all vacuum hoses for cracks and loose connections at all vacuum operated units found on the brake booster, air sensor, intake manifold, EGR valve, air duct, air conditioning door, vacuum limiter, cold start injector and evaporative cannister. Check vehicle's valves for proper compression and cylinder leakage.
6. The C.I.S. System has a primary circuit with pressure regulated at the fuel distributor. This is called supply pressure, system pressure, primary pressure or line pressure. The other circuit is the control circuit. (Pressure regulated by the control pressure regulator is called the warm-up compensator.)

III. ADAPTER SELECTION AND HOOK-UP INFORMATION

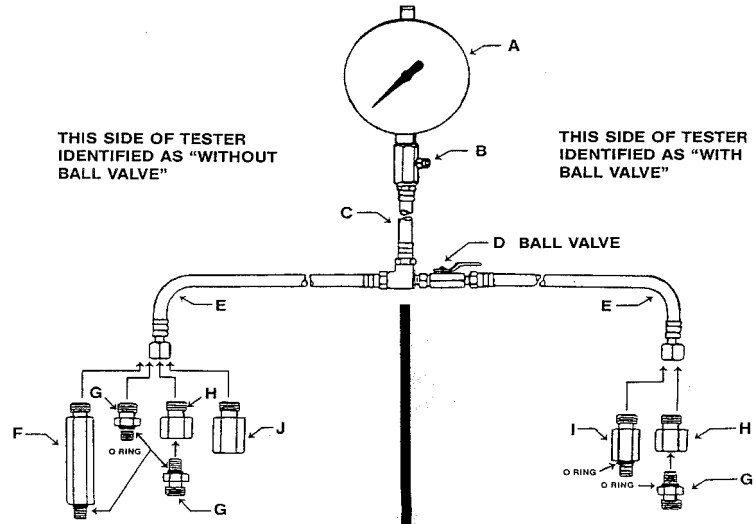

MAKE, MODEL & YEAR	NOTE: HOOK-UPS FOR THIS SIDE OF TESTER (WITHOUT BALL VALVE) ARE MADE TO FUEL DISTRIBUTOR, WARM-UP COMPENSATOR HOSE OR PRESSURE DAMPENING HOSE.	NOTE: HOOK-UPS FOR THIS SIDE OF TESTER (WITH BALL VALVE) ARE MADE TO WARM-UP COMPENSATOR OR WARM-UP COMPENSATOR HOSE.
	CONNECT TO (USE THESE ADAPTERS)	**CONNECT TO** (USE THESE ADAPTERS)
MAKE - Audi Fox MODEL - 100 & 4000 YEAR - 1975 to Date	FUEL DISTRIBUTOR (None required) FOR BANJO FITTING (Add Adapter G and O Ring)	WARM-UP COMPENSATOR HOSE (Add Adapter H, O Ring and Adapter G) FOR BANJO FITTING (Add Adapter H, O Ring and Bolt from Fuel Distributor)
MAKE - Audi Fox MODEL - 5000 YEAR - 1975 to Date	WARM-UP COMPENSATOR HOSE TO FUEL DISTRIBUTOR (Add Adapter J and Bolt from Warm-Up Compensator)	WARM-UP COMPENSATOR HOSE (Add Adapter I)
MAKE - BMW MODEL - All YEAR - 1977 to Date	FUEL DISTRIBUTOR (None required)	WARM-UP COMPENSATOR HOSE (Add Adapter H, O Ring and Adapter G)
MAKE - Mercedes Benz MODEL 6 & V8 YEAR - 1976 to Date	PRESSURE DAMPENER HOSE TOWARDS THE FUEL DISTRIBUTOR (Add Adapter H, O Ring and Adapter G) OR REMOVE PRESSURE DAMPENER AND HOSE ASSEMBLY. CONNECT TO FUEL DISTRIBUTOR (Add Adapter F, and O Ring)	WARM-UP COMPENSATOR (None required)
MAKE - Porsche MODEL - All YEAR - 1973 to Date	FUEL DISTRIBUTOR (Add Adapter G and O Ring) FOR BANJO FITTING (Add Adapter H)	WARM-UP COMPENSATOR (Add Adapter H, O Ring and Adapter G and O Ring) FOR BANJO FITTING (Add Adapter H, O Ring and Bolt from Fuel Distributor)
MAKE - SAAB MODEL - All YEAR - 1975 to Date	FUEL DISTRIBUTOR (None required)	WARM-UP COMPENSATOR HOSE (Add Adapter H, O Ring and Adapter G) FOR BANJO FITTING (Add Adapter H)
MAKE - Volkswagen MODEL - All YEAR - 1975 to Date	FUEL DISTRIBUTOR (None required)	WARM-UP COMPENSATOR HOSE (Add Adapter H, O Ring and Adapter G)
MAKE - Volvo MODEL - All YEAR - 1974 to Date	FUEL DISTRIBUTOR (None required) FUEL DISTRIBUTOR (Add Adapter G and O Ring)	WARM-UP COMPENSATOR HOSE (Add Adapter H, O Ring and Adapter G) WARM-UP COMPENSATOR HOSE (Add Adapter H, and Bolt from Fuel Distributor)

IV. OPERATING INSTRUCTIONS

1. Engine is OFF.
2. Depressurize fuel system. Reread paragraphs No. 9 and No. 10 of Important Pre-Test Information.
3. Add required adapters and O rings to test gage per Adapter Selection and Hook-Up Chart.
4. Start engine. Allow to idle. Check for leaks.
5. Observe fuel pressure reading on gage. Refer to vehicle factory manual for correct pressure for vehicle being tested.
6. Depressurize fuel system.
7. Remove tester and adapter(s) from vehicle.
8. Reconnect vehicle's fuel injection line to original condition. Start engine and check for leaks. If any leaks are noticed, stop engine, relieve fuel pressure and correct leaks.