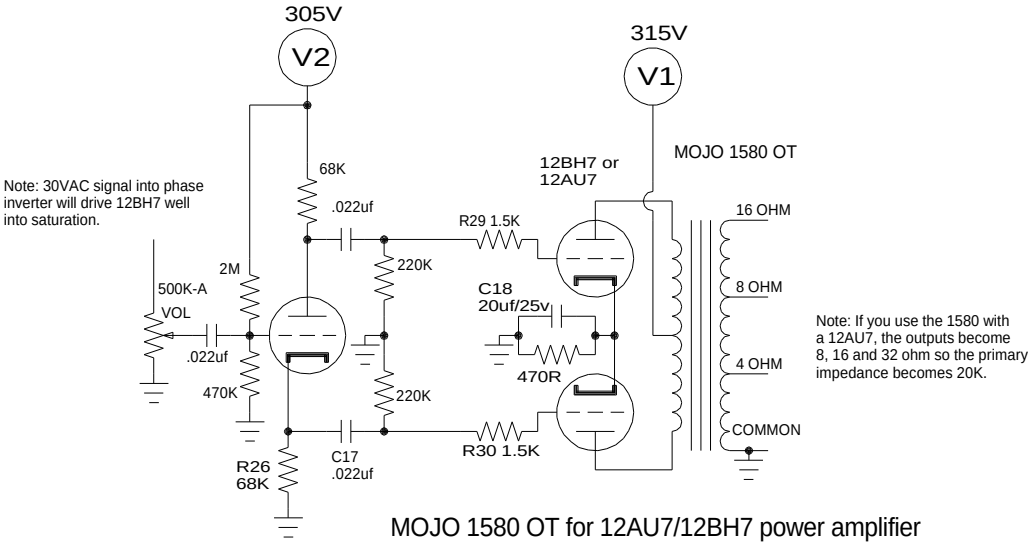

MOJO 1580 OT for 12AU7/12BH7 power amplifier

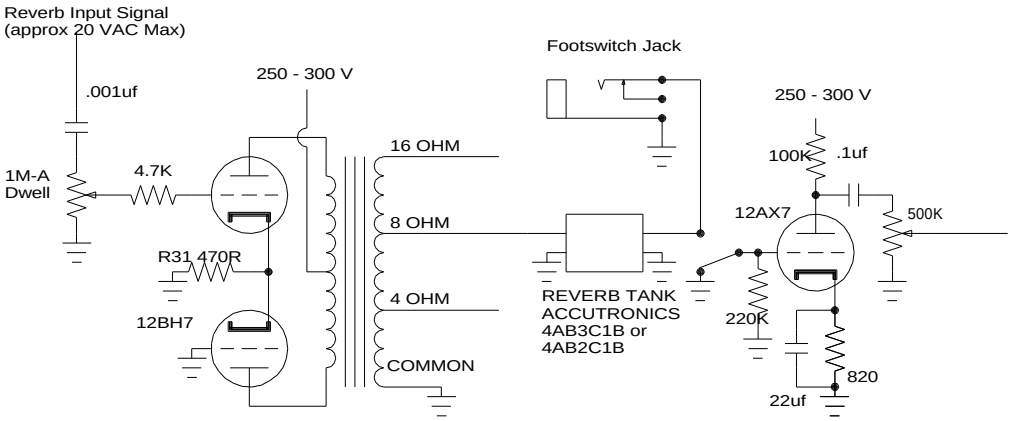

MOJO / WRIGHT 1580 OT
NOTE: Use 4 Ohm tap if you use a 12AU7. This will cause the primary impedance to be 20K to better match to the 12AU7. The 12BH7 gives more drive to reverb tank.

Typical Reverb Circuit using MOJO 1580 OT
Note: push pull drive reduces reverb hum.