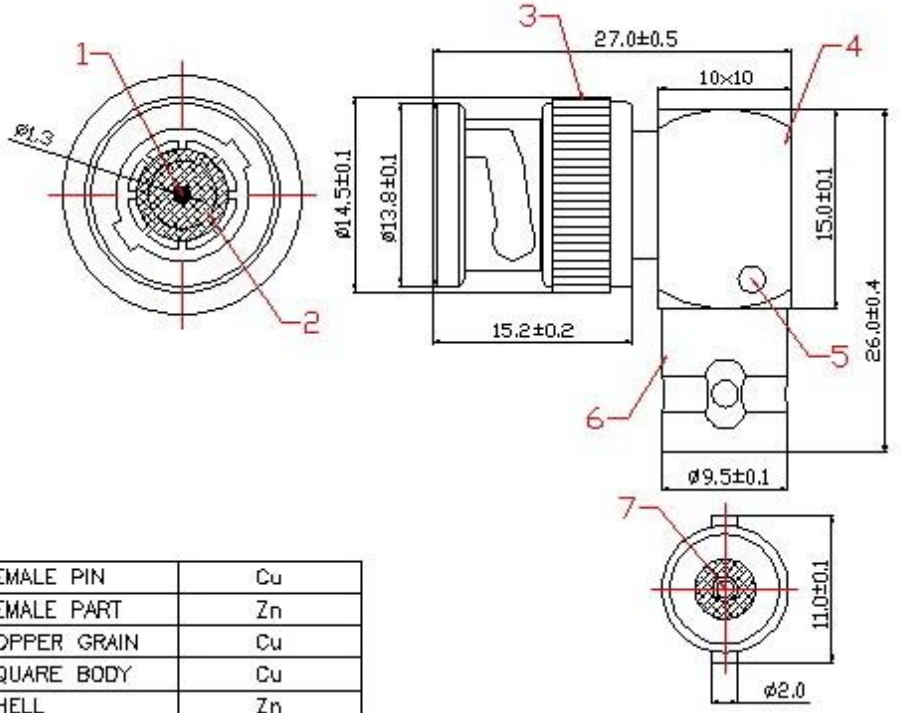

7	FEMALE PIN	Cu
6	FEMALE PART	Zn
5	COPPER GRAIN	Cu
4	SQUARE BODY	Cu
3	SHELL	Zn
2	DIELECTRIC	POM
1	MALE PIN	Cu
ITEM	DESIGNATION	MATERIAL

TOLERANCE	SIGNATURES	DATE
		06.07.01

REV	PART NO.& SAMPLE NO.	DATE	BY
A			
B			

APPROVAL:		
SHEET	SCALE	UNIT	REV
OF	1:1	mm	ø

TITLE	Right Angle BNC Male To BNC Female
CUSTOMER	