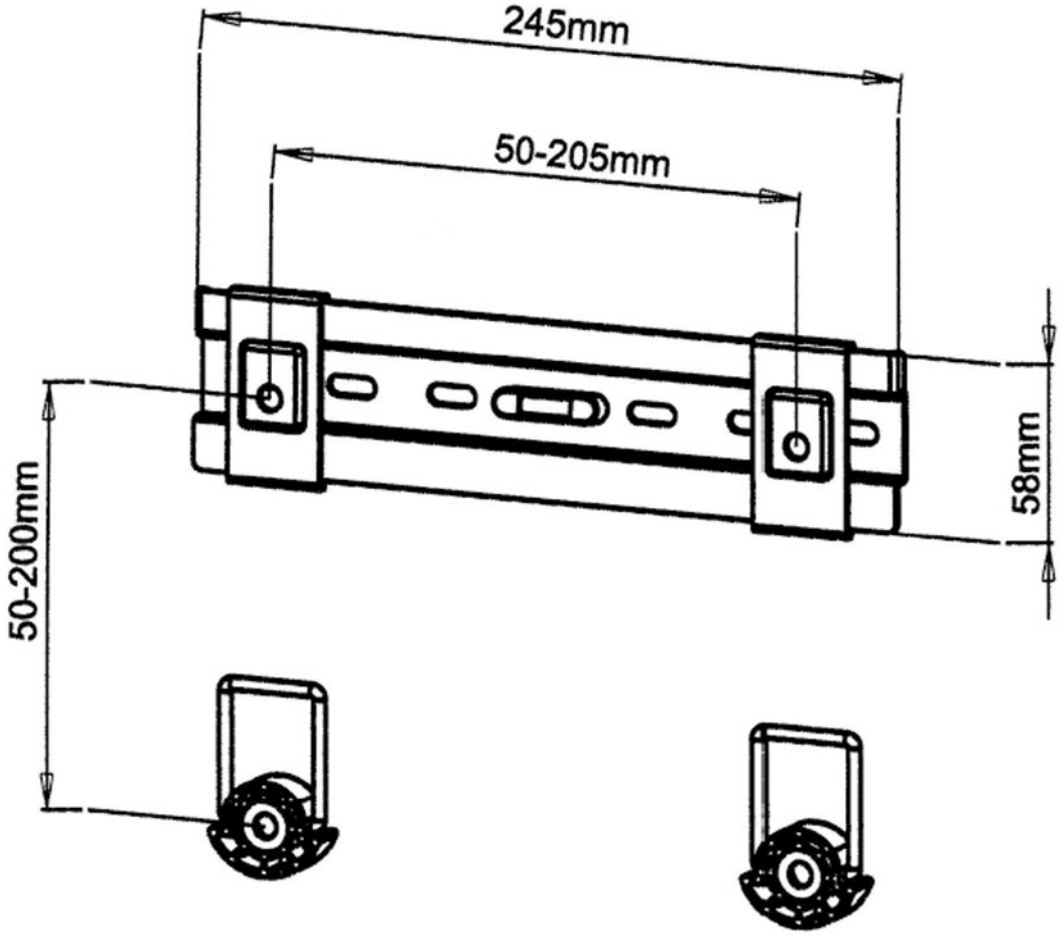

©Dayton Audio

DAYTONAUDIO

daytonaudio.com

RevNo	Revision note	Date	Signature	Checked	Approved
1:					
2:					
3:					
4:					

Designed by	Checked by	Approved by	Date	Scale	Edition
AH	BM	SM		None	A

Model: HM2337

Name:

Unit mm

Sheet 1 of 1