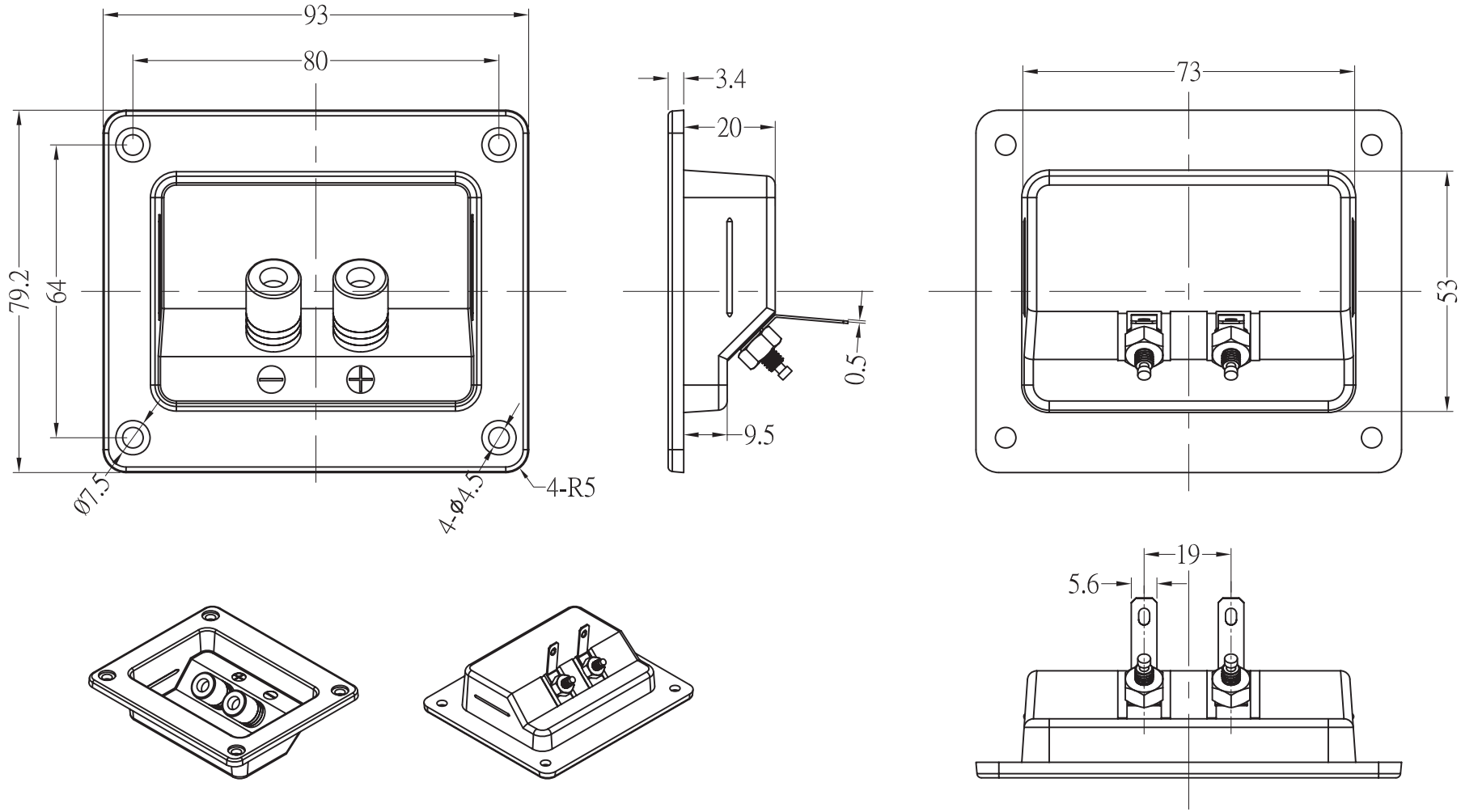

© Parts Express®

PARTS EXPRESS
AUDIO COMPONENTS & SOLUTIONS
parts-express.com

RevNo	Revision note	Date	Signature	Checked	Approved
1:					
2:					
3:					
4:					

Designed by	Checked by	Approved by	Date	Scale	Edition
AH	CP	BM	10/2020	None	A

Model: #260-288

Unit mm

Name: Speaker Terminal 3-5/8" x 3-1/8" Satin Nickel Binding Post

Sheet 1 of 1