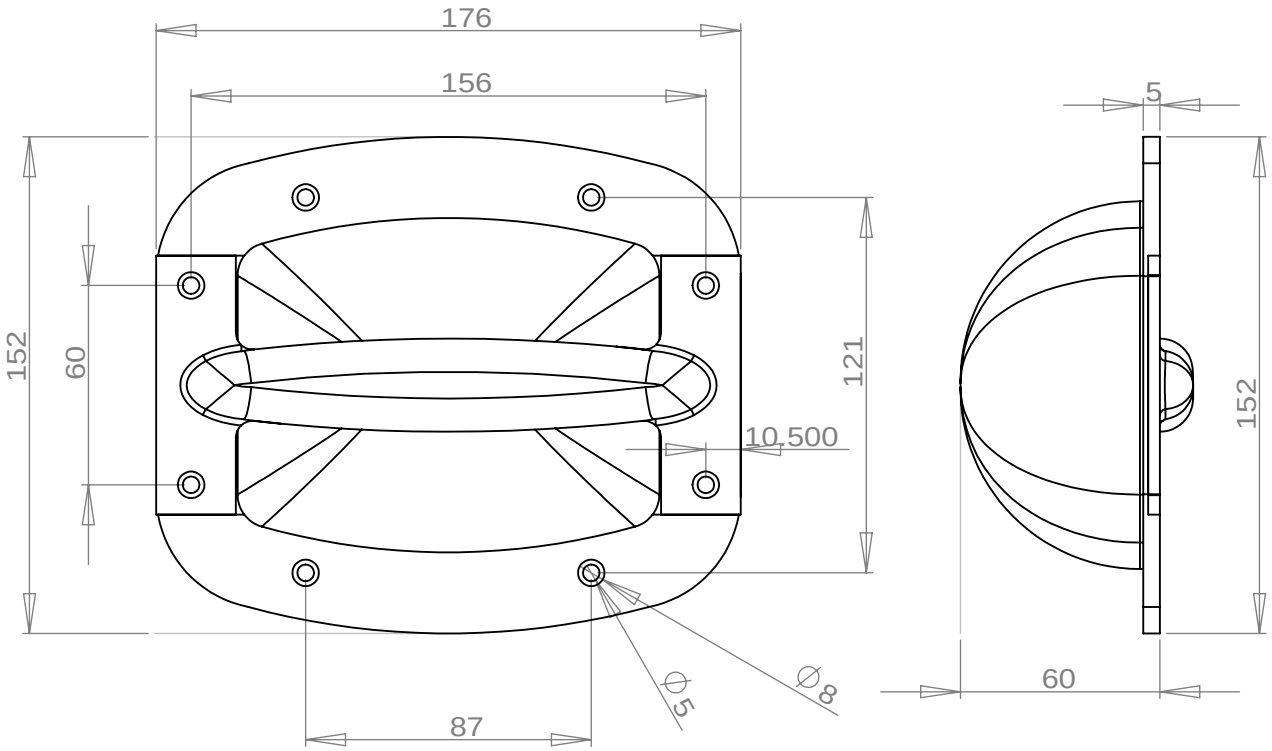

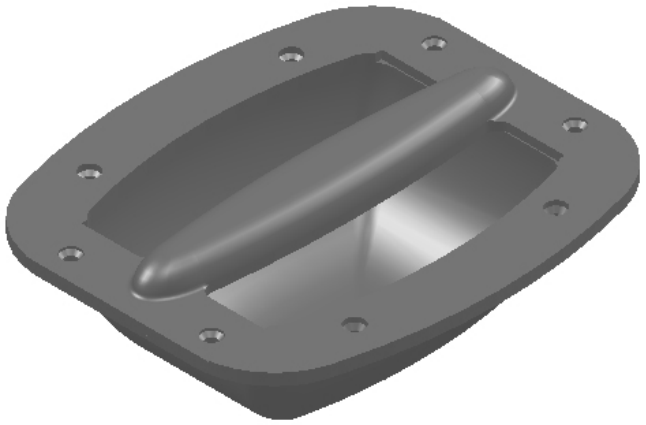

© Parts Express® 2014

PARTS EXPRESS
YOUR ELECTRONICS CONNECTION

RevNo	Revision note	Date	Signature	Checked	Approved
1:					
2:					
3:					
4:					

Designed by	Checked by	Approved by	Date	Scale	Edition
AH	TS	KK	2/2014	None	A

Model:

Name:

Unit mm

Sheet 1 of 1