BODY MOUNT ASSEMBLY INSTRUCTIONS FOR KIT #1-113

1) BEFORE INSTALLING BODY MOUNTS, YOU MUST REMOVE THE FOUR SCREWS THAT CONNECT THE FAN SHROUD TO THE RADIATOR. THIS WILL ALLOW YOU TO LOWER THE FAN SHROUD ONCE THE BODY IS LIFTED.

2) NOTE ALL BODY MOUNT POSITIONS AND FACTORY ALIGNMENT SHIMS (IF USED) BEFORE AND DURING DISASSEMBLY. YOU MAY HAVE TO REUSE THESE SHIMS TO PROPERLY ALIGN THE BODY.

3) IF MOUNTING BOLTS AND NUTS ARE RUSTED, LIBERALLY SPRAY WITH PENETRATING OIL I.E. WD-40.

4) SUPPORT VEHICLE BODY PROPERLY BEFORE REMOVING MOUNTS. USE A 2"X4" PIECE OF WOOD 24" LONG (OR ANY OTHER SUITABLE SIZE) BETWEEN JACK AND BODY PANEL TO SPREAD THE WEIGHT LOAD OUT SO AS NOT TO DAMAGE THE BODY PANELS. IF NECESSARY, SUPPORT BODY IN SEVERAL AREAS.

5) LOOSEN ALL BOLTS BUT DO NOT REMOVE.

6) WORKING FROM ONLY ONE SIDE OF VEHICLE AT A TIME REMOVE MOUNTING BOLTS AND RAISE BODY ONLY HIGH ENOUGH TO REPLACE MOUNT, NEVER HIGHER. ALSO CHECK OTHER AREAS ON BODY AND FRAME I.E. HOSES, WIRES AND FAN SHROUD TO AVOID ANY INTERFERENCE PROBLEMS WHEN RAISING BODY. REMOVE DIPSTICK TO AVOID DAMAGE.

7) REPLACE MOUNTS ONE AT A TIME. A DIAGRAM HAS BEEN PROVIDED FOR INFORMATION AS TO WHICH MOUNTS, WASHERS, SLEEVES AND BOLTS TO USE FOR EACH POSITION. INSTALL BOLTS BUT DO NOT TIGHTEN UNTIL ALL MOUNTS HAVE BEEN REPLACED.

8) AFTER ALL MOUNTS HAVE BEEN REPLACED, ALIGN SUBFRAME TO BODY AND TORQUE BOLTS TO FACTORY SPECIFICATIONS.

9) REINSTALL FAN SHROUD. DRILL HOLES FOR NEW 1/4" BOLTS 1" LOWER THAN ORIGINAL HOLES ON THE RADIATOR BRACKET THAT SHROUD MOUNTS TO. INSTALL FAN SHROUD USING 1/4" BOLTS, NUTS AND LOCK WASHERS PROVIDED IN KIT. CHECK FAN CLEARANCE AT BOTTOM OF SHROUD.

10) AFTER DRIVING VEHICLE FOR ABOUT 1000 MILES OR OFF ROADING, RE-TORQUE BOLTS AGAIN. THIS IS TO INSURE THAT THE BOLTS HAVE NOT LOOSENED DUE TO INITIAL SETTLING THAT MAY TAKE PLACE.

MOUNTING POSITIONS

MOUNTING POSITIONS ARE NUMBERED STARTING WITH #1 FOR THE MOST FORWARD POSITION TOWARD THE FRONT OF THE VEHICLE AND RESPECTIVELY HIGHER NUMBERS TOWARD THE REAR OF THE VEHICLE.

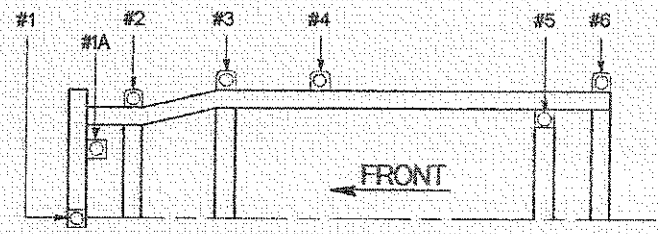

PARTS LIST FOR KIT #1-113

PART#	DESCRIPTION	QTY	POS.#
U-68092	UPPER BODY MOUNT	1	1
U-68093	LOWER BODY MOUNT	1	1
U-68101	GRILL CUSHION MOUNT	2	1A
U-68097	UPPER BODY MOUNT	6	2,3&4
U-68026	LOWER BODY MOUNT	6	2,3&4
U-68098	UPPER BODY MOUNT	4	5&6
U-68025	LOWER BODY MOUNT	4	5&6
SLV-60846	3/4" x 2.050" STEEL SLEEVE	1	1
SLV-60536	3/4" x 3.0" STEEL SLEEVE	6	2,3&4
SLV-60852	3/4" x 2.450" STEEL SLEEVE	4	5&6
WASH-1158	2"OD x 7/16"ID WASHER	10	1,5&6
WASH-21	5/8"OD x 9/32"ID WASHER	2	1A
WASH-1159	2"OD x 1/2"ID WASHER	12	2,3&4
BOLT-58	7/16"-14 x 3 1/2" BOLT	5	1,5&6
BOLT-59	1/2"-13 x 4" BOLT	6	2,3&4
BOLT-55	1/4"-20 x 3/4" BOLT	4	SEE INST.
NUT-20	1/4"-20 NUT	4	SEE INST.
WASH-1190	1/4" LOCK WASHER	4	SEE INST.

FORM 1-113 REV.8/02

#1 POSITION BODY MOUNT

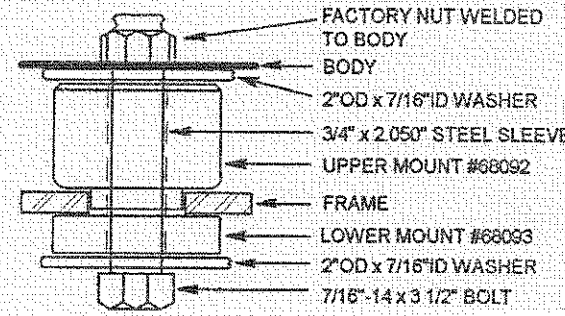

#2, #3 & #4 POSITION BODY MOUNT

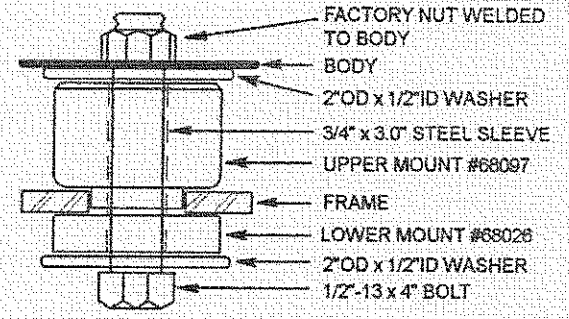
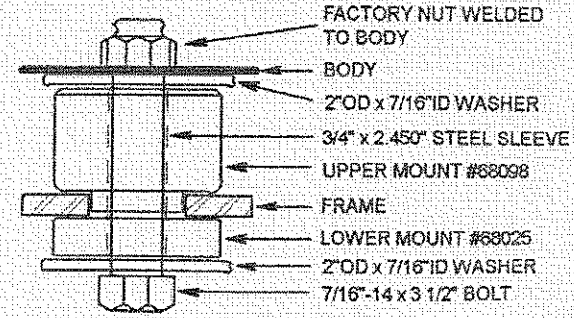
#5 & #6 POSITIONS BODY MOUNT