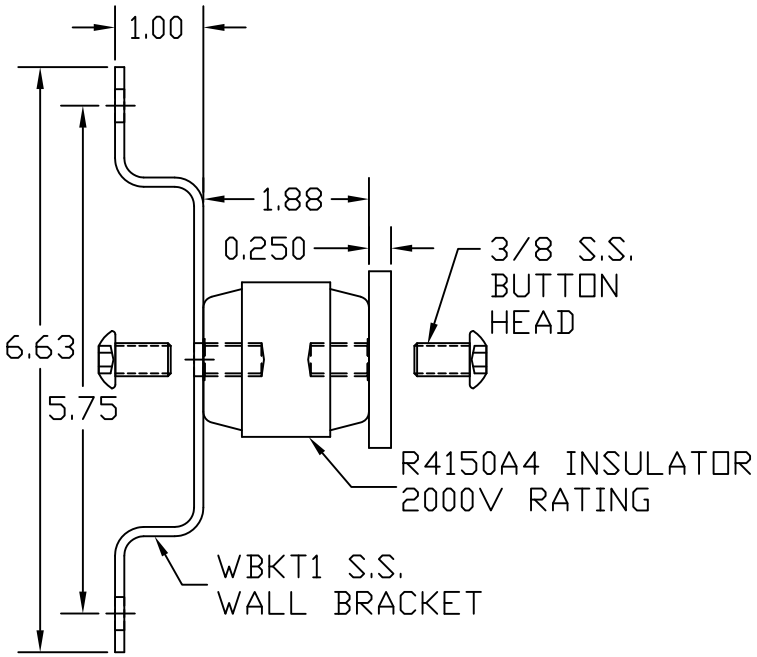

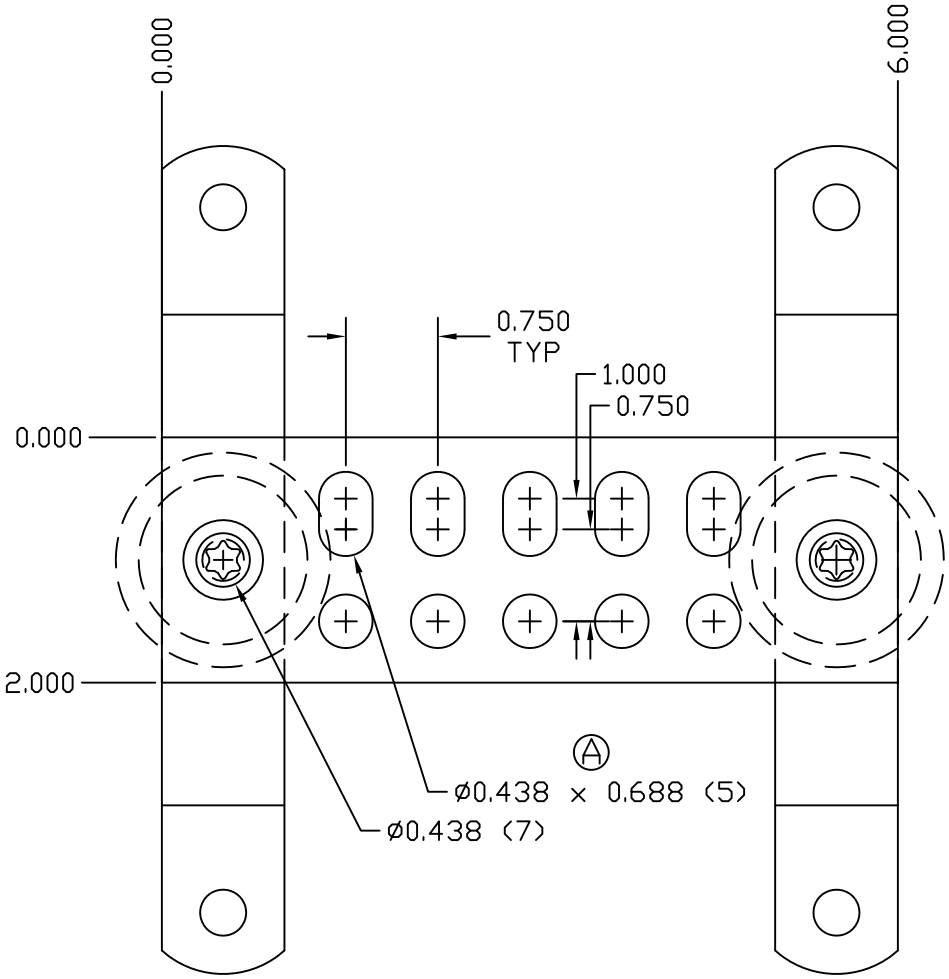

COPPER GROUND BAR ASSEMBLY

EST WT 1.9#

APPROVED

☐ AS DRAWN: _____

☐ AS NOTED: _____

DATE: _____

THIS DOCUMENT AND THE CONTENTS THEREOF IS THE PROPERTY OF HARGER INC., AND IS FURNISHED TO YOU FOR INFORMATION ONLY. THE INFORMATION CONTAINED HEREIN IS CONFIDENTIAL AND OF A PROPRIETARY NATURE AND MUST NOT BE DISCLOSED TO THIRD PARTIES WITHOUT THE EXPRESS WRITTEN APPROVAL OF HARGER INC.

LET	REVISION	DATE	BY
–	–	–	–
B	BH65SP WAS CS66S, LW6S, W6S	021108	DVB
A	WERE ø0.375 HOLES & ø0.375X0.625 SLOTS	091203	WSM

TOLERANCES UNLESS NOTED:
FRACTIONAL +/- 1/16
DECIMAL +/- .030
BREAK SHARP EDGES

3RD ANGLE PROJECTION

PART NO. GBI1426P

GROUND BAR ASSEMBLY

– –

DRAWN BY: LAL

CHECKED BY: –

DATE: 091102

HARGER®

301 ZIEGLER DRIVE
GRAYSLAKE, IL 60030
(847) 548-8700

REVISION: –

SCALE: 5/8

SHEET: 1 OF 1