VALOR FITNESS
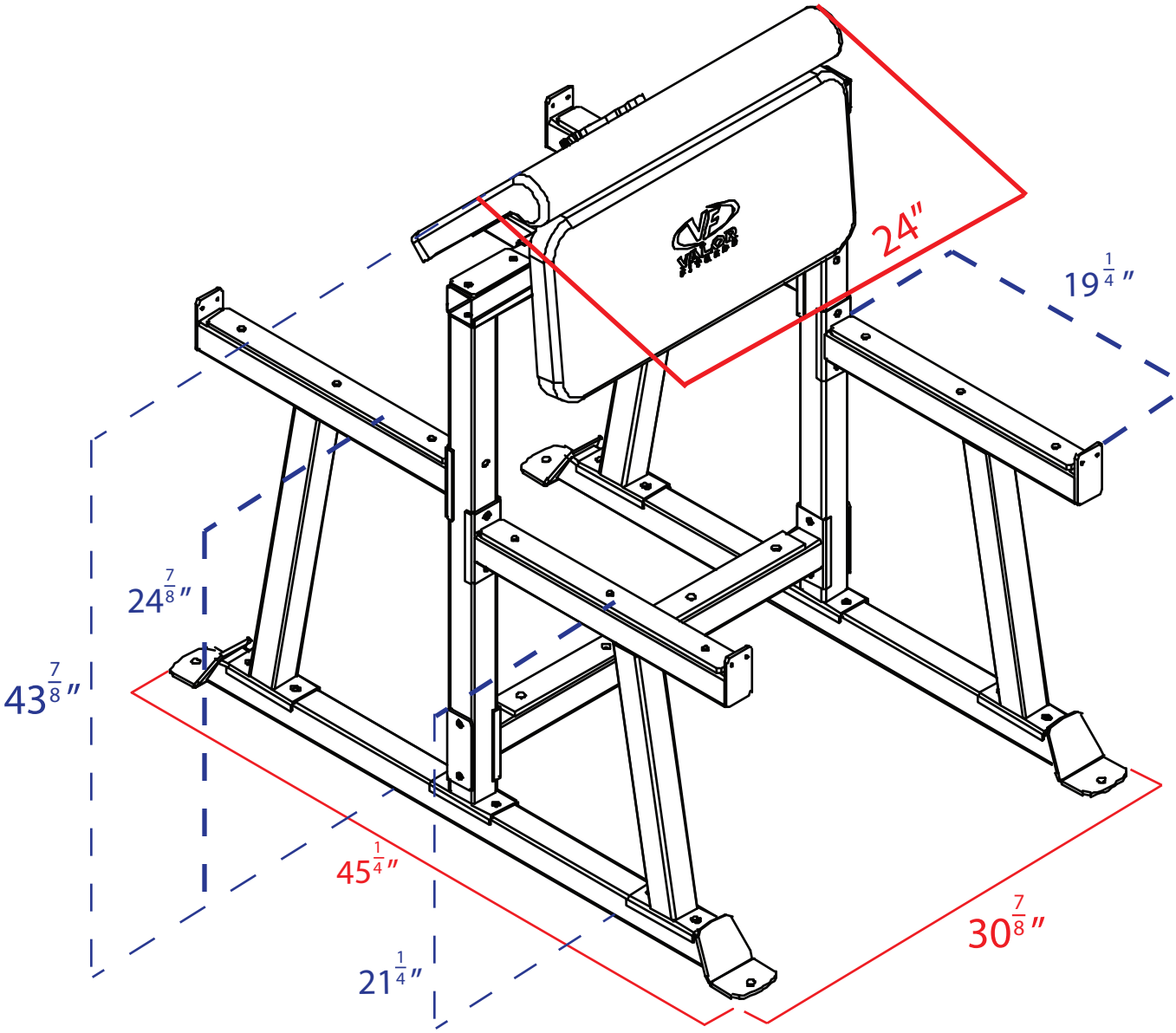
CB-5