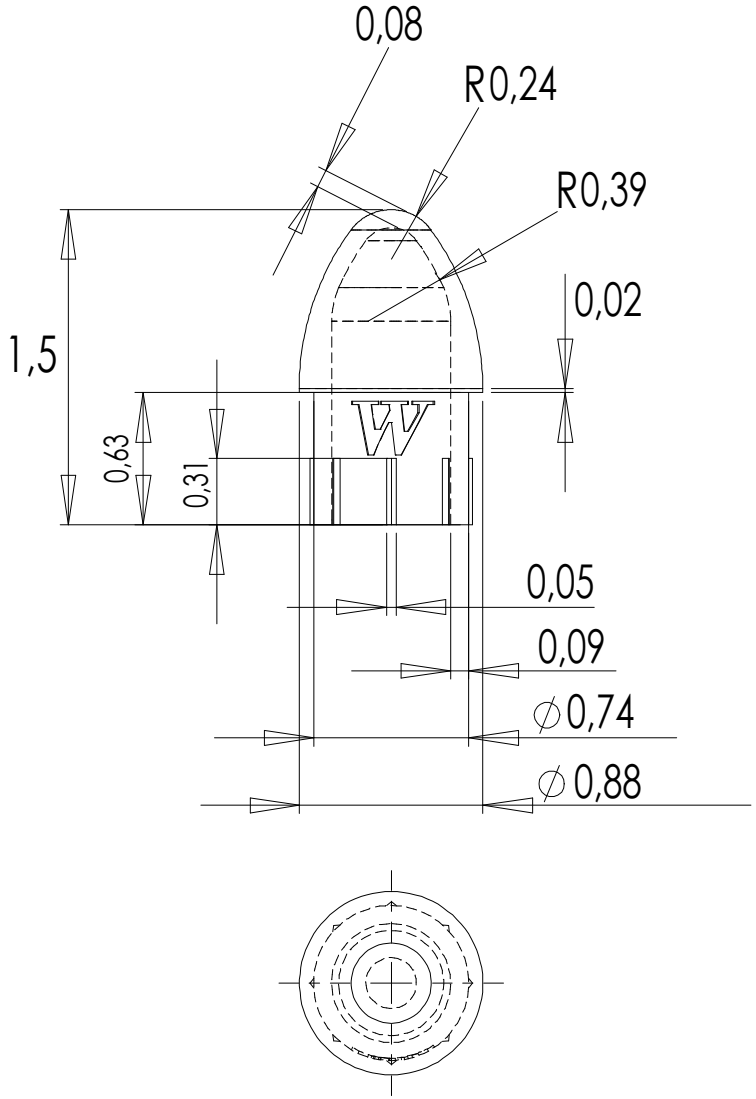

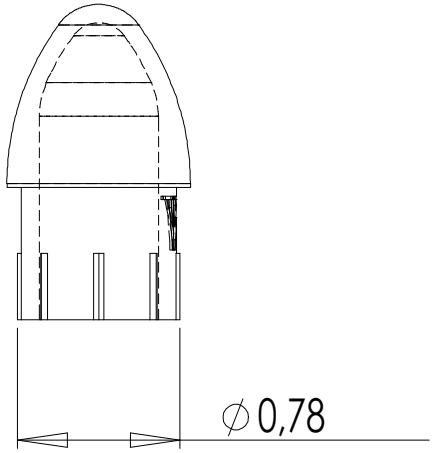

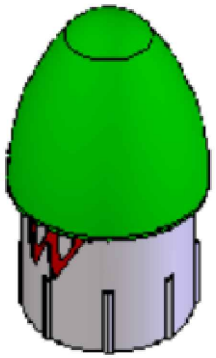

Whitecap		
P/N		6229
Units	INCHES	MATERIAL: 316SS
View		SCALE: 1:1
		SHEET: 1 of 1